KATO IMER

THINK GLOBAL, ACT LOCAL

MINI-EXCAVATORS
0.9 / 1.9 TONS

HD**09**VXE
HD**12**VXE
HD**17**VXE
HD**19**VXT

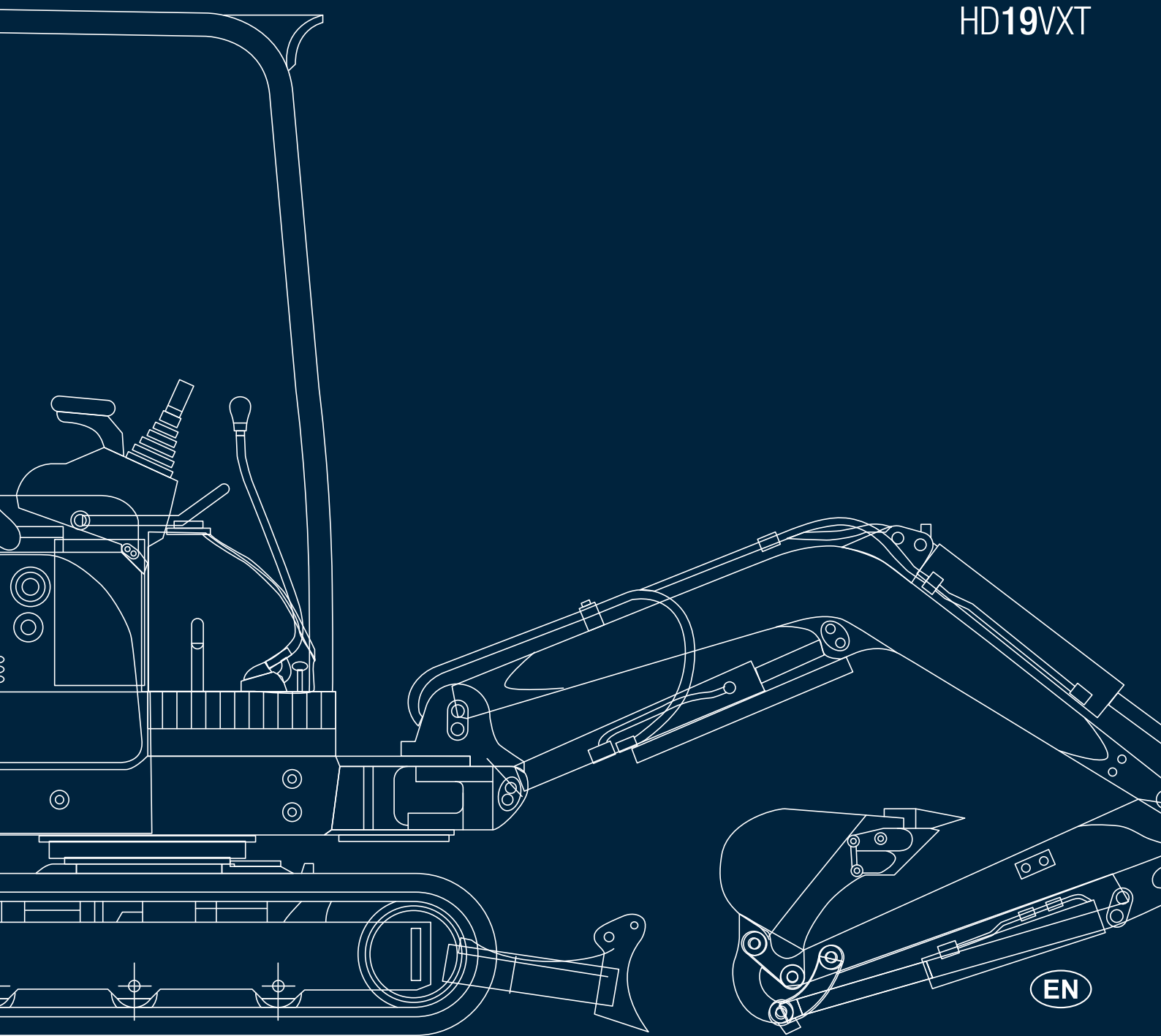

EN

HD09VXE

WHERE OTHERS CANNOT REACH

Power and speed of digging are assured when working in confined spaces: in small restructuring works, in operations of digging and maintenance of sewerage systems, also in tunnels where larger machines cannot operate, but also in the gardening and nursery sector.

COMPACT SIZE

Front turning radius with swing: 950 mm.
Machine width in narrow configuration: 700 mm.

TWO TRAVELLING SPEEDS

The two travelling speeds (1.7/3.5 km/h) enable efficient travelling and maximum manoeuvrability during operations on site along with fast driving. The pedal of the second speed is easy to use.

A YANMAR 7.3 KW DIESEL ENGINE

The YANMAR TNV series engine and the hydraulic circuit that uses two gear pumps assure a high operating speed and simultaneous movements. The engine with a low speed of rotation, enables the utmost efficiency with low consumption and limits polluting emissions according to the antipollution requirements of EPA Tier 4.
The exploitation index is reduced to improve durability and reliability over time.

Slewing motor

Despite the machine's small size, the slewing motor is equipped with an automatic brake to lock the turret in any position.

Zero-tail: to adapt to every situation

Thanks to its extremely short rear turning radius of 485 mm, while slewing the chassis frame turns within the clearance of the tracks with the carriage extended and allows greater safety both for the machine and for the operator.
If the carriage is closed access into confined spaces is facilitated.
The auxiliary system version is available as an optional for the hydraulic breaker and other attachments.

CHECKING AND MAINTENANCE

The fully opening engine bonnet provides an easy view of most of the engine and allows easy accessibility to the various components for operations of inspection and maintenance. The battery has reduced maintenance. The resin tank has been designed to avoid damage from rust and the aluminium radiator ensures a greater exchange of heat and high resistance to corrosion. The high capacity air filter increases the length of time between maintenance.

ROLLERS

Rollers with a double, outer side, support reduce wear on the tracks, improve load distribution and increase operational stability.

WORK OUTFIT

The remarkable geometry of the arm movement and the minimal distance between bucket and dozer blade enable performing excavation operations even close to the dozer blade. The lifting cylinder is supported by a safety plate and all the feed pipes of the cylinders of the bucket and swing mechanism are well protected. The auxiliary hydraulic circuit with the system is combined for using many hydraulic attachments.

Variable gauge undercarriage

Thanks to the variable gauge (700 - 950mm) the HD09VXE ensures high versatility. Access is permitted into really limited spaces and extending the carriage in very few seconds provides a high safety level and considerable operational stability.

COMFORT AND SAFETY

Designed around the operator, the driving position is comfortable thanks to the adjustable seat and ergonomic controls. The driving seat can be accessed from both sides. The HD09VXE is equipped with DCS Direct Control System controls that assure maximum precision.
The control pedals of the auxiliary circuit and swing are separate. Both pedals can be folded back thereby increasing the space at the operator's feet. The control monitor is easy to read. A safety device checks access to the driving seat, if the lever is lifted it prevents movements of the arm. A front bar assures the operator a safe and protected driving seat; at the rear the machine is well protected by a cast bumper.

RETRACTABLE DOZER BLADE EXTENSION

The blade width can be easily adjusted, offering the flexibility to fix the job. Adjustment is simple and easy with two fastening pins.

TECHNICAL DATA

Engine	Yanmar 2TNV70
N° cylinders / displacement	2 / 570 cc
Rated power	7.3 kW / 2400 rpm
Machine weight with rubber shoe	890 kg (no canopy)
Operating weight with rubber shoe	965 kg (no canopy)
Max. digging depth	1570 / 1770 mm (with long arm)
Minimum front turning radius	1220 / 1320 mm (with long arm)
Bucket digging force	1090 kgf
Standard bucket width	370 mm
Standard bucket capacity	0.022 m^3

HD12VXE

SMALL AND POWERFUL

The HD12VXE is a completely new concept: small enough to pass through a door, sturdy enough to do jobs above its category. An exceptional machine.
With its 9.4 kW engine and digging depth of 2010 mm it handles heavy work in the most challenging conditions with ease.

REAR FRAME WITHIN CLEARANCE

While slewing, the chassis frame turns within the clearance of the tracks with the carriage extended, allowing greater safety for the machine and for the operator. With the carriage closed, the machine can access even the most restricted spaces. With a width of 870 mm and a tilt-back rollbar, the machine is perfect for internal restructuring works.

COMPACT SIZE

The perfect combination of small size and high power. The HD12VXE gives access to previous inaccessible spaces, for working in interiors or passing through buildings to access internal gardens or courtyards which are otherwise almost impossible to get to.

TWO TRAVELLING SPEEDS

The two travelling speeds (2.3 / 4.0 km / h) enable moving quickly on site along with maximum manoeuvrability.

Minimum front turning radius with swing
dx = 1291 mm, sx = 1383 mm
Front turning radius = 1540 mm
Rear turning radius = 552 mm

Machine weight 1180 kg ideal for transport on trucks in the 3.5 ton category

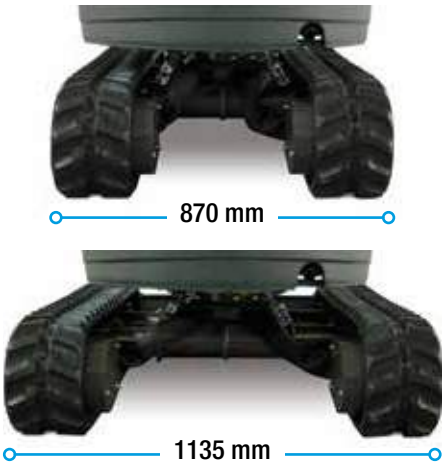

VARIABLE GAUGE UNDERCARRIAGE

Thanks to the variable gauge (870 - 1135 mm), the HD12VXE ensures considerable safety and operational stability during side excavation and lifting operations in confined spaces or on particularly uneven or steep ground. The circular tube improves extension while reducing backlash.

The HD12VXE can drive through doors no more than 90 cm wide. The rollbar can also be removed in just a few minutes to facilitate passing through low clearance areas.

SAFETY

The TOPS certified rollbar cage (an optional FOPS cover is available) ensures outstanding working visibility. The arm movements are softened by the Anti-Shock valve in the hydraulic circuit. In the phase of lifting the 1st arm the shock of stopping at the arm limit stop is reduced by the cylinder shock-absorbing system. The slew brake motor prevents accidental arm movements during transport or when the machine Is parked. The arm swinging is controlled by the LH joystick. The auxiliary circuit control pedal is equipped with a tilt-away guard which acts both as a foot rest and circuit lock for remote operation.

RETRACTABLE DOZER BLADE EXTENSION

The blade width can be easily adjusted, offering the flexibility to fix the job. Adjustment is simple and easy with two fastening pins.

ACCESSIBILITY AND EASY MAINTENANCE

The HD12VXE's vertically-opening engine hood provides easier access and visibility of most of the engine along with easy accessibility for daily inspection (oil-filters-belts) and maintenance. The battery requires reduced maintenance. The diesel tank is generously sized to allow the machine to be run for an entire day in normal use. It is easy to access for refuelling and protected with a key-operated cap. The pumps are equipped with pressure-gauge points to facilitate monitoring hydraulic pressure value.

YANMAR 9.4 KW DIESEL ENGINE

The 3-cylinder engine runs at low speed with a reduced exploitation index for improved durability and long-term reliability. The air filter with its high filtering capacity is composed of a double cartridge that reduces maintenance and increases the reliability of the engine. The fuel circuit is equipped with a diesel filter with a water separator, ensuring a long engine life The high efficiency of the engine combined with an advanced hydraulic system ensures low fuel consumption and low running noise, and limits polluting emissions according to the antipollution requirements of EPA Tier 4.

HYDRAULIC CIRCUIT

The circuit includes two variable capacity pumps integrated with the Straight Travel system on the blade section, and a separate gear pump for the servo-controls, thus guaranteeing a perfect balance of operating speed and force. Precise and simultaneous manoeuvres are assured with no loss of power or drop in engine speed. The HD12VXE succeeds in moving forward while performing working operations without losing any linearity in the trajectory.

AUXILIARY HYDRAULIC CIRCUIT

The auxiliary hydraulic circuit for hydraulic attachments such as a hydraulic breaker, shears, hydraulic grippers and drills is supplied as standard as far as the 2nd arm. A deviator valve selects single - or double - action operation.

COMFORT AND SAFETY

The operator position is especially comfortable, thanks to the adjustable bucket seat design and wrist supports and ergonomic control layout. It is equipped as standard with servo-assisted joysticks that ensure the utmost precision. Two safety levers control access to the driving seat and, if lifted, inhibit all the machine working and travelling controls. The multifunction analogue control display - hour meter, fuel level, oil temperature and warning lights - is user friendly and facilitates the work of less expert operators, thus increasing their productivity.

WORKLIGHT

The arm mounts a worklight for a perfect view of the dig.

TECHNICAL DATA

Engine	Yanmar 3TNM68
N° cylinders/displacement	3 / 784 cc
Rated power	9.4 kW / 2200 rpm
Machine weight with rollbar	1180 kg
Operating weight with rollbar	1255 kg
Max. digging depth	2010 mm
Minimum front turning radius	1540 mm
Bucket digging force	1210 kgf
Standard bucket width	400 mm
Standard bucket capacity	0.036 m^3

HD**17**VXE

WHERE OTHERS CANNOT REACH

The mini-excavator HD17VXE, the new ultra-compact model, utilizes the technology of higher class machines. Power and speed of digging are assured when working in confined spaces: in small restructuring works, in operations of excavation and maintenance of sewerage systems, in tunnels where larger machines cannot operate, but also in the gardening and nursery sector.

Quick moving on site and maximum manoeuvrability

Considerable safety and operational stability during side digging and lifting operations in confined spaces or on particularly uneven or steep ground

3TNV70 YANMAR 10.5 KW DIESEL ENGINE

The 3-cylinder engine has a low speed of rotation and a reduced exploitation index to improve durability and reliability over time. The air filter with its high filtering capacity is composed of a double cartridge that reduces maintenance and increases the reliability of the engine. The fuel circuit is equipped with a diesel filter with a water separator, ensuring a long engine life The high efficiency of the engine combined with an advanced hydraulic system ensures low fuel consumption and less noise and limits polluting emissions according to the antipollution requirements of EPA Tier 4.

TWO TRAVELLING SPEEDS

The two travelling speeds (2.1 / 4.2 km / h) enable moving quickly on site along with maximum manoeuvrability.

COMFORT AND SAFETY

The position is comfortable thanks to the adjustable spring seat, horizontal adjustment, tilting backrest and ergonomic layout of the controls. It is equipped as standard with servo-assisted joysticks that ensure the utmost precision. The safety lever controls access to the driving seat and, if lifted, inhibits all the machine working and travelling controls. The instrumentation console is rational and user-friendly. Behind the seat there is a document holder.

WORK OUTFIT

The auxiliary hydraulic circuit for using various hydraulic attachments is installed as standard up to the arm.
The system uses a valve to return the oil directly to the hydraulic reservoir. A pedal locking device enables using manually controlled hydraulic equipment.
As an optional there is a version with a long arm to increase the digging depth (max 2350 mm).
The second speed push-button control is provided.

REAR FRAME WITHIN CLEARANCE

While slewing, the chassis frame turns within the clearance of the tracks with the carriage extended, allowing greater safety for the machine and for the operator. If the carriage is closed access into confined spaces is facilitated. It is available in the rubber track or iron track version, with a canopy with 4 pillars with TOPS-FOPS protection (conforming to EU safety regulations).

OPERATIONAL FLEXIBILITY

When the machine is working with the carriage closed, the two extensible sections of the blade are easily stored behind the blade itself. A lever via a function selector controls the movement of the blade or the expansion of the undercarriage.

FULLY VERSATILE

The special geometry of the arm and the movement combined with the minimal distance between bucket and dozer blade enable excavating and loading materials of a large size even close to the dozer blade.

SOLIDITY AND STABILITY

The long carriage (1570 mm) besides helping reduce the specific pressure on the ground also ensures great front stability even with the blade raised. The travelling unit is integrated in the width of the tracks.

HYDRAULIC CIRCUIT

It uses two variable displacement pumps and two gear pumps, ensuring constant balancing between operational speed and working forces. Precise and simultaneous manoeuvres are assured with no loss of power or drop in engine speed. The HD17VXE succeeds in moving forward while performing working operations without losing any linearity in the trajectory.

ACCESSIBILITY AND EASY MAINTENANCE

The side opening engine bonnet provides easier access and visibility of most of the engine and allows easy accessibility to the various components for operations of daily inspection (oil-filters-belts) and maintenance. The battery requires reduced maintenance. Refuelling with diesel is done via handy and easy access with a lockable cap. Checking the operating pressures is facilitated by quick couplers on the pumps.

Safety

The canopy ensures a full view for the operator

When lifting the boom, the cylinder has a shock-absorbing system for giving smoothness at the end of the stroke.

A similar system comes into action A similar system is working when the swing bearing is swinging

The self braking motor prevents accidental movement when the operator is away

The pedals controlling the auxiliary circuit and swing are separate and strengthened with sturdy guards with the function of a footrest

The arm movements are softened by the Anti-Shock valve in the hydraulic circuit

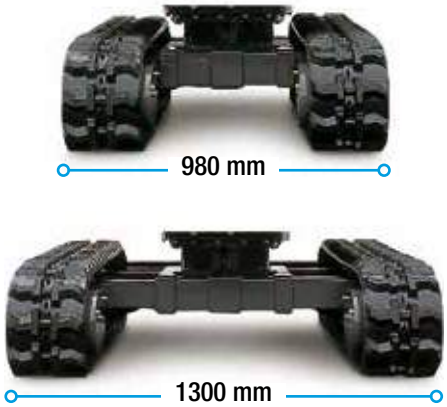

VARIABLE GAUGE UNDERCARRIAGE

Thanks to the variable gauge (980 - 1300 mm), the HD17VXE ensures considerable safety and operational stability during side excavation and lifting operations in confined spaces or on particularly uneven or steep ground.
Sites with reduced manoeuvring spaces are no longer a problem.

TECHNICAL DATA

Engine	Yanmar 3TNV70
N° cylinders/displacement	3 / 854 cc
Rated power	10.5 kW / 2300 rpm
Machine weight with canopy	1615 / 1675 kg (rubber shoe / steel shoe)
Operating weight with canopy	1690 / 1750 kg (rubber shoe / steel shoe)
Max. digging depth	2350 mm (with long arm)
Minimum front turning radius	1580 mm (with long arm)
Bucket digging force	1600 kgf
Standard bucket width	400 mm
Standard bucket capacity	0.044 m^3

HD**19**VXT

VARIABLE GAUGE UNDERCARRIAGE

Ideal for operating in rough and narrow places, thanks to the variable gauge (from 980 to 1300 mm) operated by an electric control located on the blade control lever, it offers high operating stability and versatility. With an operating weight of 1745 kg, the HD19VXT is the top machine in its category.

Battery-disconnecting switch: protects the battery when the machine is not used for long periods

Digging depth of 2460 mm

Proportion controls on the aux. system joy-stick are available as optional

Two travelling speeds (2.1-4.2 km / h)

DIGGING AREA

The HD19VXT model offer optimum 360° visibility, for the version with canopy and that with cab, thanks to large windows. Two adjustable front work lights, protected to prevent accidental breakage, allow the operator to make use of optimum lighting of the work area. The arm geometries offer excellent digging performance down to a depth of 2460 mm.

AUXILIARY SYSTEM

The VXT series is equipped with an auxiliary hydraulic circuit for the use of accessories, with prearrangement of the system up to the foremost arm in the HD19VXT. A deviator valve selects single - or double - action operation.

HIGH COMFORT FOR THE OPERATOR

The work station is comfortable thanks to the adjustable sprung seat, ergonomic controls and servo-assisted joy-sticks that ensure maximum precision. The machines can be fitted with cabs with radio, openable front window, windscreen wiper, heater and rear glove box that ensure a high quality standard. If the driving position is abandoned, a system inhibits all operation functions concerning the first arm, foremost arm, bucket, upper frame rotation and travel.

AVAILABLE IN CAB VERSION

Featuring an innovative and refined design, the cabin of HD19VXT mini-excavator ensures maximum protection for the operator. Both the cab and the canopy (with 4 uprights) comply with international standards: TOPS (side tipping protection), ROPS (rollover protection) and FOPS (protection against objects falling from above). The harmonious shapes of the cabin and the ample windows are designed to offer comfort and optimum operating visibility.

TECHNICAL DATA

Engine	Yanmar 3TNV70
N° cylinders/displacement	3 / 854 cc
Rated power	10.5 kW / 2300 rpm
Machine weight with rubber shoe	1670 / 1830 kg (canopy / cab)
Operating weight with rubber shoe	1745 / 1905 kg (canopy / cab)
Max. digging depth	2460 mm
Minimum front turning radius	1663 mm
Bucket digging force	1600 kgf
Standard bucket width	400 mm
Standard bucket capacity	0.044 m^3

features

KATO IMER S.p.A. reserves the right to modify all data and measurements without prior notice.

	HD09VXE	HD12VXE	HD17VXE	HD19VXT
GENERAL SPECIFICATIONS				
Standard bucket capacity	0.022 m^3	0.036 m^3	0.044 m^3	0.044 m^3
Standard bucket width	370 mm	400 mm	400 mm	400 mm
Machine weight RS* Canopy / Cab	890 kg (no canopy)	1180 kg	1615 kg	1670 / 1830 kg
Operating weight RS* Canopy / Cab	965 kg (no canopy)	1255 kg	1690 kg	1745 / 1905 kg
Transport dimensions	2700 x 720 x 1405 mm	3100 x 870 x 2280 mm	3380 x 980 x 2330 mm	3665 x 980 x 2340 mm
Gradeability	30°	30°	30°	30°
Ground pressure RS/SS* Canopy	26.2 kPa (0.27 kgf / cm^2)	26.2 kPa (0.27 kgf / cm^2)	25.6 kPa (0.26 kgf / cm^2) / 27.3 kPa (0.28 kgf / cm^2)	26.6 kPa (0.27 kgf / cm^2) / 28.3 kPa (0.29 kgf / cm^2)
Minimum ground clearance	160 mm	175 mm	175 mm	175 mm
* RS/SS Rubber Shoe/Steel Shoe				
ENGINE				
Model	Yanmar 2TNV70	Yanmar 3TNM68	Yanmar 3TNV70	Yanmar 3TNV70
N° cylinders and displacement	2 / 570 cc	3 / 784 cc	3 / 854 cc	3 / 854 cc
Bore for stroke	70 x 74 mm	68 x 72 mm	70 x 74 mm	70 x 74 mm
Rated output (ISO 1585)	7.3 kW / 2400 rpm	9.4 kW / 2200 rpm	10.5 kW / 2300 rpm	10.5 kW / 2300 rpm
Fuel consumption	286 g / kWh	260 g / kWh	272 g / kWh	279 g / kWh
Engine oil pan capacity	1.8 L (Maximum level)	2.5 L (Maximum level)	3.8 L (Maximum level)	3.8 L (Maximum level)
ELECTRICAL SYSTEM				
Voltage	12 V	12 V	12 V	12 V
Battery	12 V - 40 Ah	12 V - 45 Ah	12 V - 45 Ah	12 V - 45 Ah
Alternator	12 V - 20 A	12 V - 20 A	12 V - 20 A	12 V - 20 A
Starter motor	12 V - 1,0 kW	12 V - 1,2 kW	12 V - 1,1 kW	12 V - 1,1 kW
HYDRAULIC SYSTEM				
Pumps maximum flow rate	11.1 L / min x 2	13.2 L / min x 2	17.2 L / min x 2 + 12 L / min	17.2 x 2 + 12 L / min
Max Pressure / Setting	16.2 MPa (165 kgf / cm^2)	20.6 MPa (210 kgf / cm^2)	20.6 MPa (210 kgf / cm^2)	20.6 MPa (210 kgf / cm^2)
Control	DCS (Direct Control System) controls	hydraulic remote control	hydraulic remote control	hydraulic remote control
DOUBLE ACTION HYDRAULIC CIRCUIT FOR ACCESSORIES				
Maximum flow rate	22.2 L / min	26 L / min	29.2 L / min	29.2 L / min
Max. setting pressure	16.2 MPa (165 kgf / cm^2)	20.6 MPa (210 kgf / cm^2)	20.6 MPa (210 kgf / cm^2)	20.6 MPa
END-OF-STROKE CUSHIONING				
Arm cylinder	rod fully extended	rod fully extended	rod fully extended	rod fully extended
Rocker arm cylinder	-	-	-	-
SLEWING SYSTEM				
Slewing speed	8.7 min^{-1}	8.5 min^{-1}	9.4 min^{-1}	9.4 min^{-1}
Turret braking	automatic multi-disc brake	automatic multi-disc brake	automatic multi-disc brake	automatic multi-disc brake
BUCKET PERFORMANCE				
Max bucket digging force (ISO 6015)	10.6 kN (1090 kgf)	11.86 kN (1210 kgf)	15.7 kN (1600 kgf)	15.7 kN (1600 kgf)
Max arm digging force (ISO 6015)	6.2 kN (630 kgf)	7.84 kN (800 kgf)	9.35 kN (950 kgf)	9.4 kN (950 kgf)
LOWER FRAME				
Undercarriage length	1220 mm	1339 mm	1570 mm	1570 mm
Variable gauge undercarriage	700 / 950 mm	870 / 1135 mm	980 / 1300 mm	980 / 1300 mm
Tracks width	180 mm	200 mm	230 mm	230 mm
Lower rollers / upper each side	2	3	3	3
Track tension	tension spring and grease cylinder	tension spring and grease cylinder	tension spring and grease cylinder	tension spring and grease cylinder
Dozer blade size (width x height) mm	700 / 950 mm x 240 mm	870 / 1135 mm x 230 mm	980 / 1300 mm x 235 mm	980 / 1300 mm x 235 mm
Lift above ground	220 mm	230 mm	230 mm	230 mm
Drop below ground	150 mm	210 mm	340 mm	340 mm
TRAVEL SYSTEM				
Travel speed (1st/ 2nd)	1.7 / 3.5 km / h	2.3 / 4.0 km / h	2.1 / 4.2 km / h	2.1 / 4.2 km / h
CAPACITY				
Fuel Tank Capacity	8.5 L	12.5 L	20 L	20 L
Hydraulic reservoir capacity	8.2 L	17 L	19 L	19 L
Hydraulic circuit total capacity	14 L	26 L	23 L	23 L
Engine coolant	2.2 L	3.6 L	3.6 L	3.6 L
ARM SWING SYSTEM				
Right swing angle	90°	80°	80°	80°
Left swing angle	50°	50°	55°	55°
OTHER DATA				
Noise level LwA	90 dB	93 dB	93 dB	93 dB

equipment

	HD09VXE	HD12VXE	HD17VXE	HD19VXT
SUPPORT FRAME				
Rubber shoe (width mm)	180	200	230	230
Attachment points for lifting-anchoring-towing and lubrication of the swing cylinder foot	std	std	std	std
Variable gauge undercarriage (mm) - Backfill blade with extensions	700-950	870-1135	980-1300	980-1300
Steel tracks (width mm)	-	-	230 opt	230 opt
ENGINE				
Two-phase dry air filter with visual clogging indicator	std	std	std	std
Electric pre-heating device	std	std	std	std
Fuel water separator	std	std	std	std
Plastic fuel tank with drain plug	std	std	std	std
Engine speed adjustment	std	std	std	std
Auto-Idle and Eco-Mode (fuel consumption reduction)	-	-	-	-
ELECTRICAL SYSTEM				
12 V battery with fuse box	std	std	std	std
DRIVING SEAT				
Longitudinal adjustment cushioned bucket seat, vinyl covering	-	std	std	std
Fabric seat	-	-	-	opt
Non-slip rubber mat	std	std	std	std
Wrist support	-	std	std	std
Seatbelt	-	with reel	std	std
High speed control	std	std	std	std
Travel control pedals	-	std	std	std
EQUIPMENT AND MONITORING DEVICES				
Worklight switch; auxiliary system control	std	std	std	std
Aux. system proportional control button on joystick	-	-	-	-
Water temperature control instrument	-	digital	analogue	analogue
Fuel level control instrument	visual	digital	analogue	analogue
Hour meter	std	std	std	std
Warning light for: preheating, engine oil pressure, battery charge, water temperature	std	std	std	std
High speed indicator light	-	-	-	-
Engine alarm device in case of overheating or low oil pressure	std	std	std	std
CANOPY VERSION				
FOPS protection against falling objects	-	opt	std	std
TOPS protection against tipping	-	std	-	-
TOPS and ROPS protection against tipping and rolling	opt	-	std	std
CABIN VERSION				
TOPS / ROPS protection against tipping / rolling	-	-	-	std
FOPS protection against falling objects	-	-	-	opt
Heating with fan	-	-	-	std
Front sliding window under the roof	-	-	-	std
Removable lower front window	-	-	-	std
Right-hand side sliding window	-	-	-	std
Grab handles and “full wide” door handle to facilitate closing from the inside	-	-	-	std
Radio pre-arrangement	-	-	-	std
Windscreen wiper and washer on front window	-	-	-	std
Rearview mirrors (right and left) kit for cab	-	-	-	opt
Back-up alarm	-	-	-	-
HYDRAULIC SYSTEM				
ISO assisted hydraulic controls	mechanical	std	std	std
Pump gear / variable flow rate (std)	gears	std	std	std
Hydraulic arm swing control	pedal	joystick	pedal	joystick
Track adjustment control	std	std	std	std
Worklight positioned centrally under the arm	-	-	-	-
DIGGING AND MOVING EQUIPMENT				
Monoblock arm (length mm)	1350	1480	1650	1800
Rocker arm (length mm)	700	870	950	1200
Long rocker arm	+200 mm (opt)	-	+250 mm (opt)	-
Arm hydraulic swinging angle	140°	130°	135°	135°
Limit shock absorber on arm cylinder	std	std	std	std
Limit shock absorber on rocker arm cylinder	-	-	-	-
Shock valve on arm cylinder	-	std	std	std
Rapid attachment of mechanical accessories	opt	opt	opt	opt
Bucket in various dimensions	opt	opt	opt	opt
Loads handling device	-	-	-	opt
HYDRAULIC CIRCUITS FOR ACCESSORIES				
Hydraulic circuit for hammer with direct return to tank for double-acting accessories	std	std	std	std
Second hydraulic circuit for double-acting accessories	-	-	-	opt
Third hydraulic circuit for double-acting accessories	-	-	-	-
SAFETY AND COMFORT				
Operating and travel controls lock out to enable the operator to exit	std	std	std	std
Manual lock for the operating and travel controls	std	std	std	std
Diesel tank cap with lock and mesh filter	std	std	std	std
Glass breaker hammer in the cab	-	-	-	std
Turret lock automatic brake	std	std	std	std
Arm cylinder anti-drift system	std	-	std	std
Horn	std	std	std	std
Rear counterweight	-	-	opt	opt

HD**09**VXE

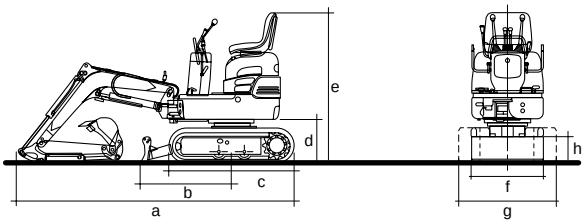

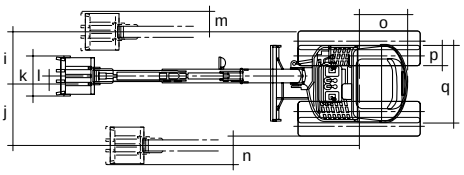

DIMENSIONS (mm)

a	b	c	d	e	f	g	h	i	j	k	l	m	n	o	p	q
2700	890	1220	405	1405	700	700 / 950	240	470	570	370	70	180	280	485	180	700 / 950

HD**12**VXE

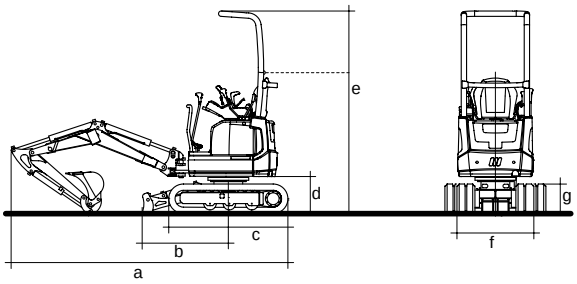

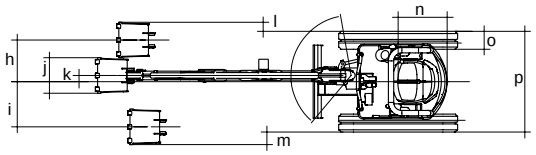

DIMENSIONS (mm)

a	b	c	d	e	f	g	h	i	j	k	l	m	n	o	p
3110	970	1339	417	2277 / 1700	870 / 1135	333	469	508	400	70	102	141	552	200	870 / 1135

HD**17**VXE

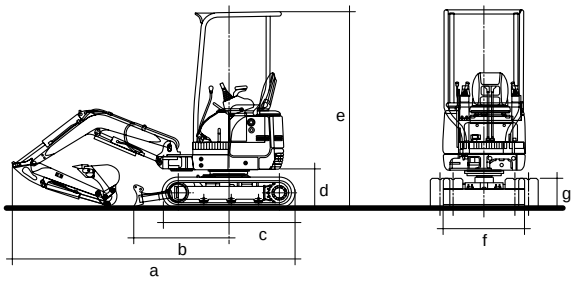

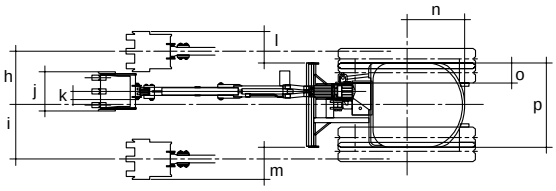

DIMENSIONS (mm)

a	b	c	d	e	f	g	h	i	j	k	l	m	n	o	p
3380	1155	1570	460	2330	980 / 1300	395	615	610	400	150	335	330	680	230	980 / 1300

HD**19**VXT

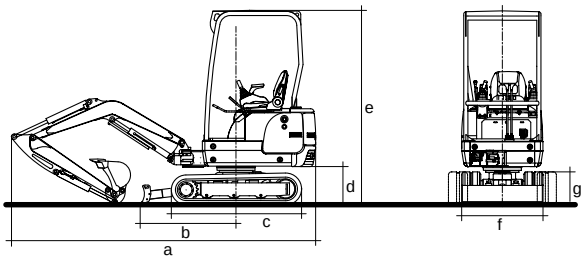

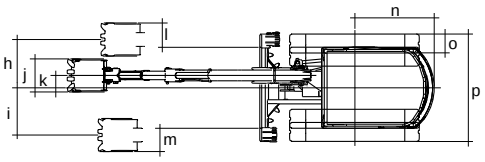

DIMENSIONS (mm)

a	b	c	d	e	f	g	h	i	j	k	l	m	n	o	p
3670	1155	1570	460	2350	980 / 1300	395	570	560	400	150	280	270	960	230	980 / 1300

working range

the drawing is generic and is only for illustrative purposes

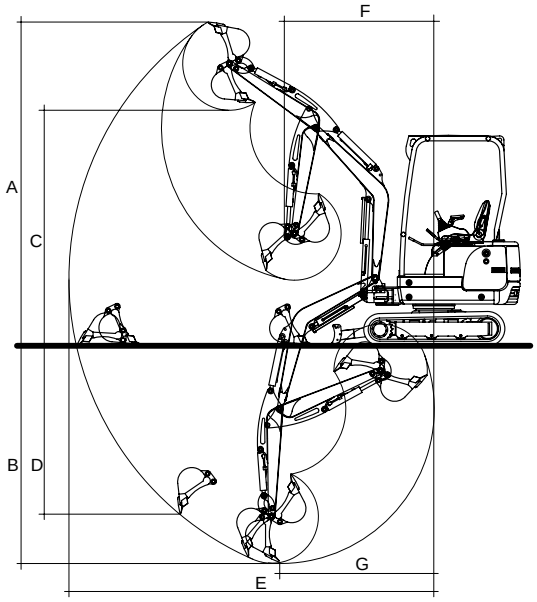

		HD**09**VXE	HD**12**VXE	HD**17**VXE	HD**19**VXT
A	Maximum digging height	2755 / 2950* mm	3050 mm	3610 / 3810* mm	3640 mm
B	Max. digging depth	1570 / 1770* mm	2010 mm	2100 / 2350* mm	2460 mm
C	Maximum dumping height	1970 / 2150* mm	2170 mm	2560 / 2760* mm	2660 mm
D	Maximum vertical digging depth	1175 / 1400* mm	1480 mm	1770 / 2010* mm	1980 mm
E	Maximum digging radius	2980 / 3190* mm	3450 mm	3760 / 3990* mm	4080 mm
F	Front turning radius	1220 / 1320* mm	1540 mm	1490 / 1580* mm	1660 mm
	at right arm swing	950 / 1030* mm	1290 mm	1280 / 1340* mm	1450 mm
G	Maximum digging depth radius	1330 / 1340* mm	1570 mm	1680 mm	1710 mm

* with long arm

Download the latest version
of this catalogue.

Official **App**

Download on the App Store

GET IT ON Google Play

KATO IMER S.p.A.
53037 San Gimignano (SI) Loc. Cusona - Italy
Telephone: +39 0577 951 21 - Fax: +39 0577 982 400
info@katoimer.com | www.katoimer.com

piucommunication.com
Cod. ME-09/19-EN_v.01_03/2020